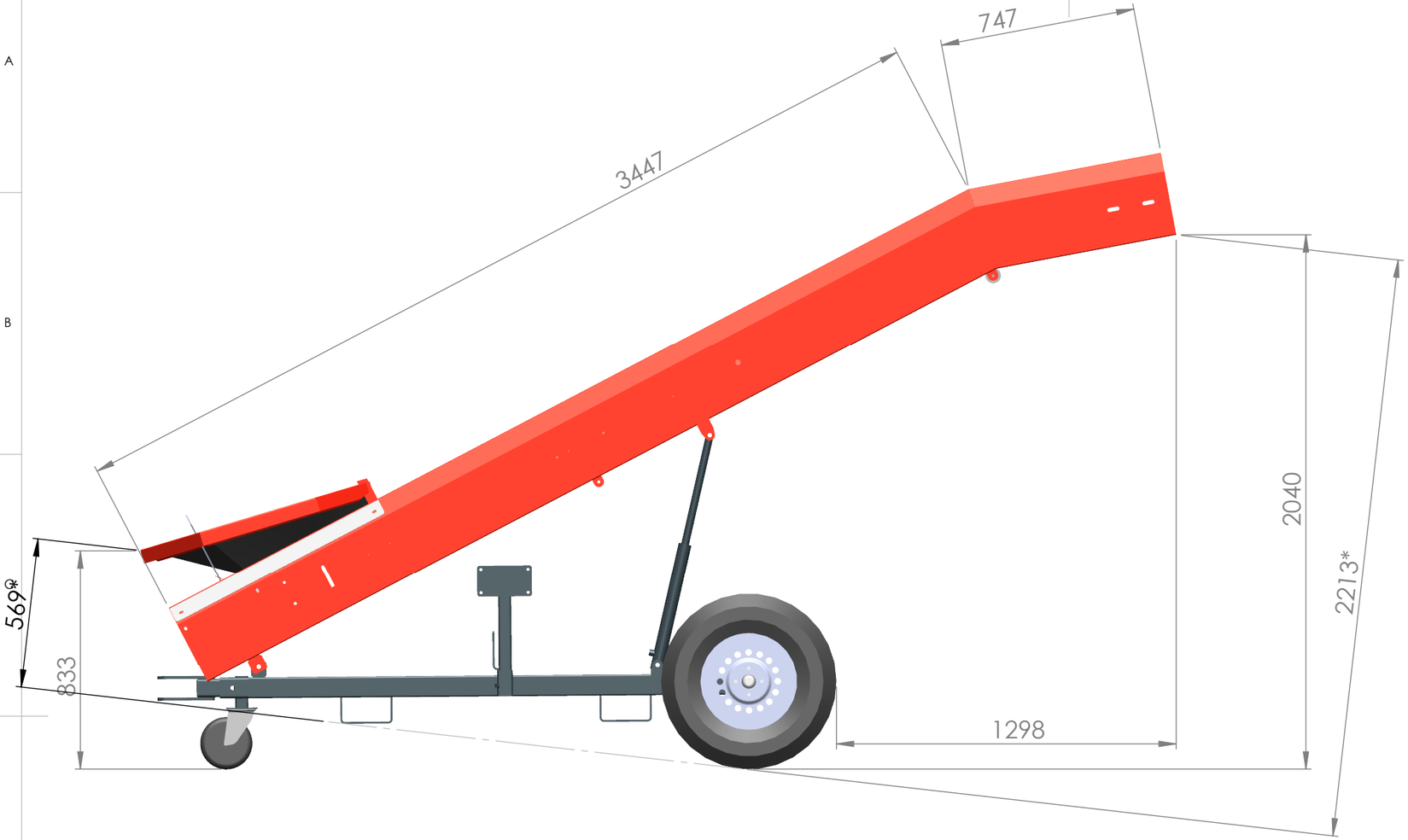

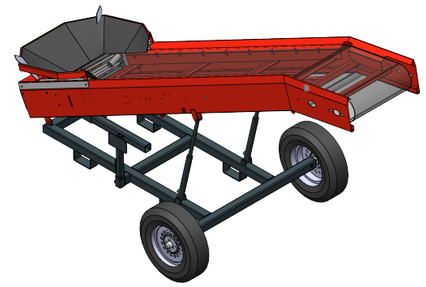

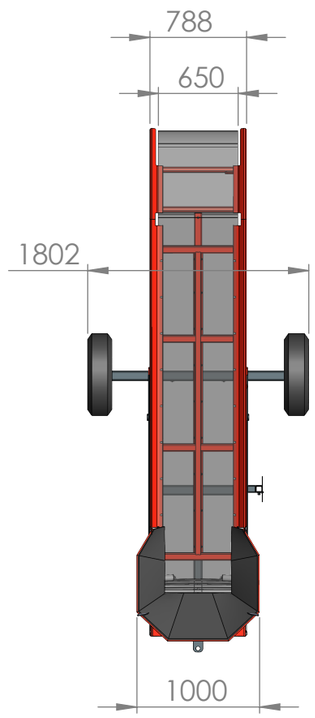

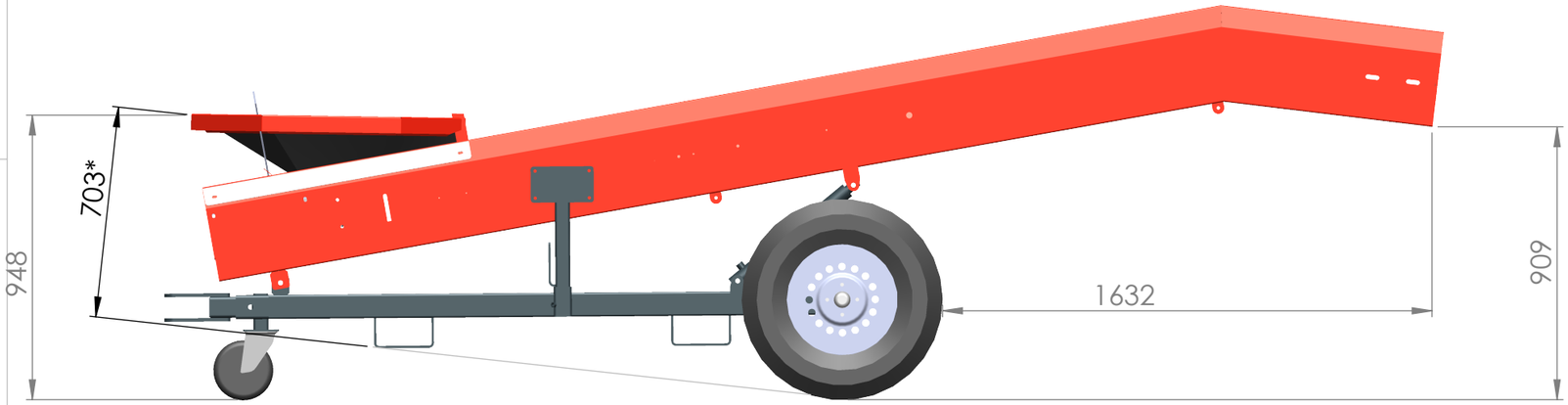

*without a swivel wheel

4-65

VAN TRIER